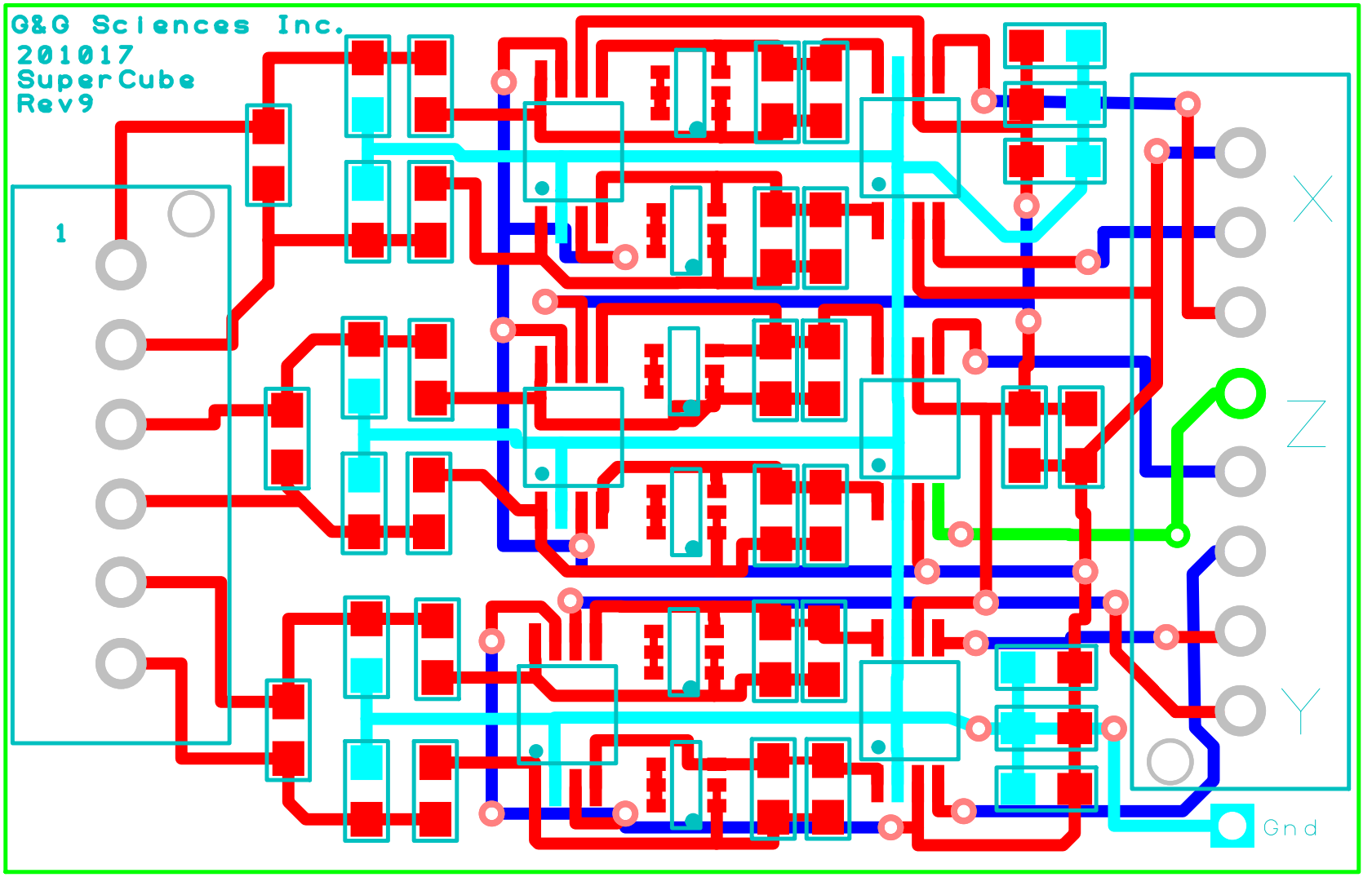
G&G Sciences Inc.
201017
SuperCube
Rev9
1
X
Z
Y
Gnd